PUBLISHED: 27-JUN-2017
2017.0 DISCOVERY (LR), 308-07

TRANSFER CASE - [+] SINGLE SPEED TRANSFER CASE

TRANSFER CASE REAR OUTPUT SEAL

(G2006820)

REMOVAL AND INSTALLATION

41.20.54	OIL SEAL (S) - REAR OUTPUT SHAFT - RENEW	3000 CC, AJ V6 (AJ126), SINGLE SPEED TRANSFER CASE	5	USED WITHINS	
41.20.54	OIL SEAL (S) - REAR OUTPUT SHAFT - RENEW	3000 CC, AJ V6 (AJ126), TWIN SPEED TRANSFER CASE	5.5	USED WITHINS	

transmissionmanuals.com

SPECIAL TOOL(S)



204-525-1

Replacer, Drive Flange



205-726

Remover/Installer, Wheel Hub Bearing



308-637

Installer

transmissionmanuals.com



JLR-308-927

Support Tool, Transfer Case



JLR-308-931

Remover, Transfer Case Flange



JLR-308-933

Remover, Transfer Case Flange

transmissionmanuals.com

PART(S)

STEP	PART NAME	QUANTITY
Installation Step 2	Transfer case rear output seal and bearing kit	1

Installation Step 4	Transfer case rear output shaft snap ring	1

REMOVAL

CAUTION:

Make sure that all parts provided with the install kit are installed.

NOTE:

- Some variation in the illustrations may occur, but the essential information is always correct.
- Some components shown removed for clarity.

1. Disconnect the battery ground cable.
   Refer to: Specifications (414-00 Battery and Charging System - General Information, Specifications).

2. **WARNING:**

   Make sure to support the vehicle with axle stands.

   Raise and support the vehicle.

3. Drain the transfer case fluid.
   Refer to: Transfer Case Draining and Filling (308-07 Transfer Case - [+] Twin Speed Transfer Case, General Procedures).

4. Remove the transfer case.
   Refer to: Transfer Case - TDV6 3.0L Diesel - Gen 2/TDV6 3.0L Diesel /TDV6 3.0L Diesel - Gen 1.5 (308-07 Transfer Case - [+] Single Speed Transfer Case, Removal).
   Refer to: Transfer Case - V6 S/C 3.0L Petrol (308-07 Transfer Case - [+] Single Speed Transfer Case, Removal).
   Refer to: Transfer Case - INGENIUM I4 2.0L Diesel (308-07 Transfer Case - [+] Single Speed Transfer Case, Removal).

transmissionmanuals.com

5.

CAUTION:

Make sure the bolt holes are clean and free of foreign materials.



Remove the 17 transfer box case bolts.

transmissionmanuals.com

6.

WARNING:

Eye protection must be worn.

CAUTION:

Care must be taken to avoid damage to the mating surfaces.

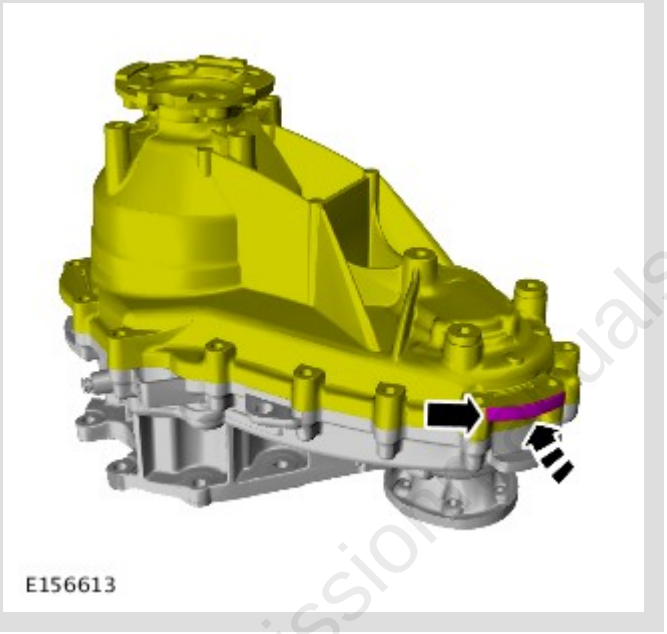

Using a soft faced mallet, release the rear casing.

7.

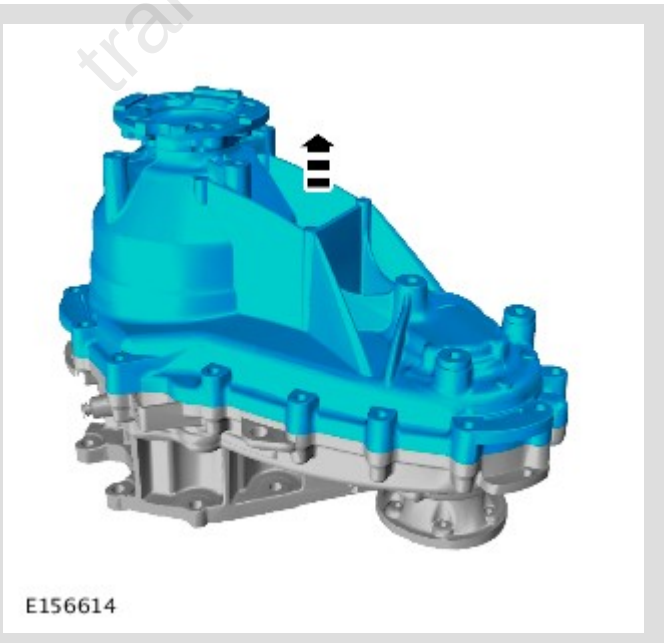

Split the transfer box case.

transmissionmanuals.com

8.

CAUTION:

Make sure that the mating faces are clean and free of foreign material.

Remove the sealant from the transfer case mating faces.

9.

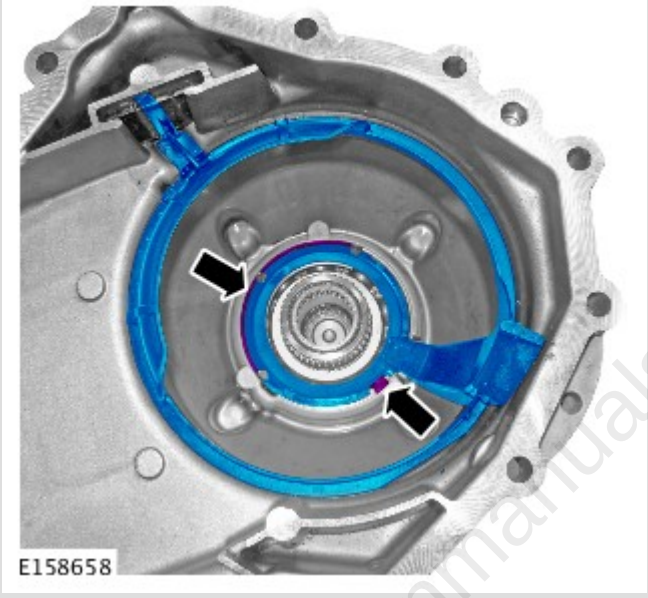

Remove the oil guide assembly.

transmissionmanuals.com

10.

NOTE:

Note the orientation of the component prior to removal.

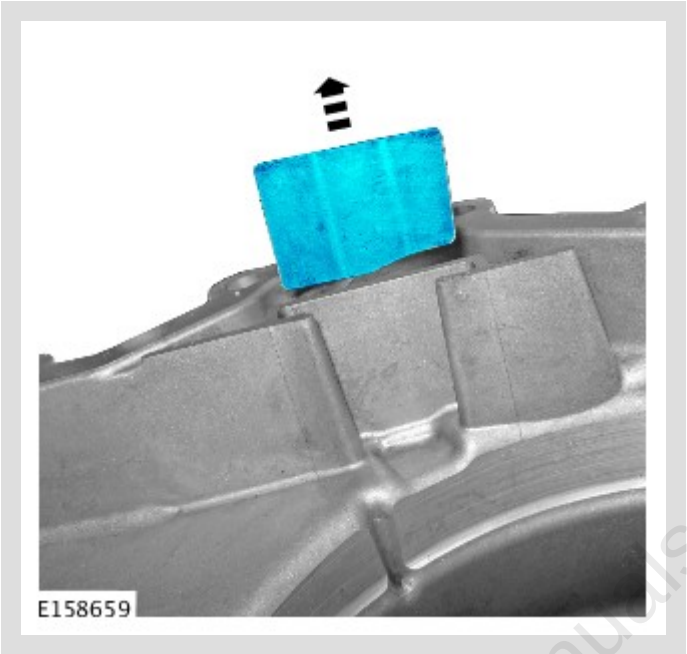

Remove the magnet.

11.



Remove the circlip.

12.



Install the special tool.
Special Tool(s): JLR-308-927

13.

CAUTION:

Make sure that the special tool is correctly located. This will make sure that the snap ring is fully compressed during the next step.

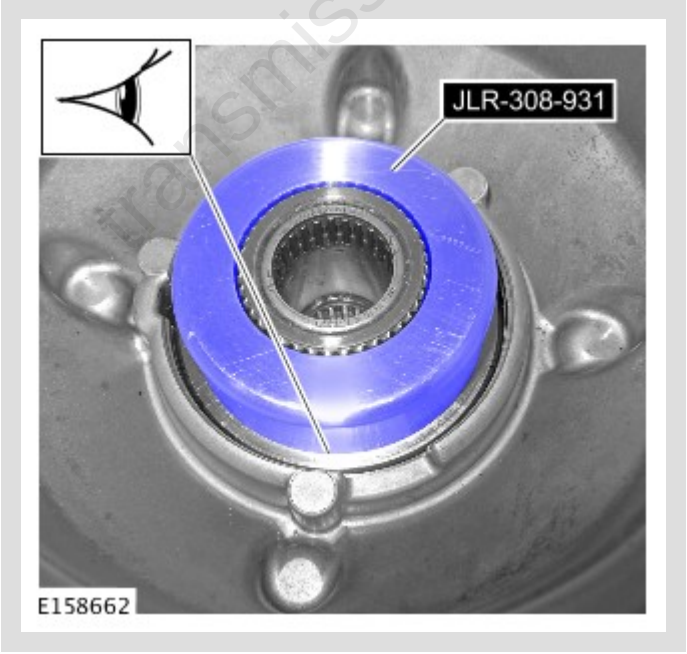

Install the special tool.
Special Tool(s): JLR-308-931

transmissionmanuals.com

14.

CAUTION:

- Do not use excessive force whilst removing the flange assembly.
- Discard the snap ring.

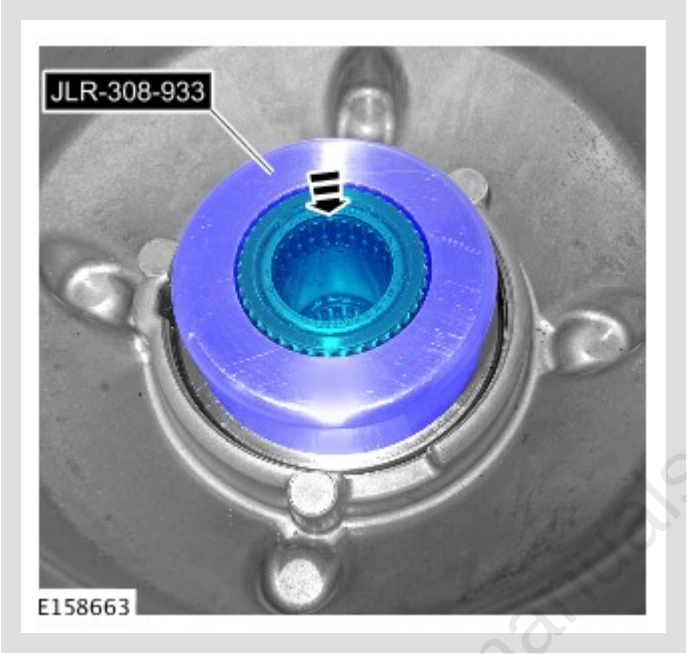

Release the transfer case rear output shaft.
Special Tool(s): JLR-308-933

15.



Remove the seal.

transmissionmanuals.com

16.



Remove the bearing.

INSTALLATION

1.

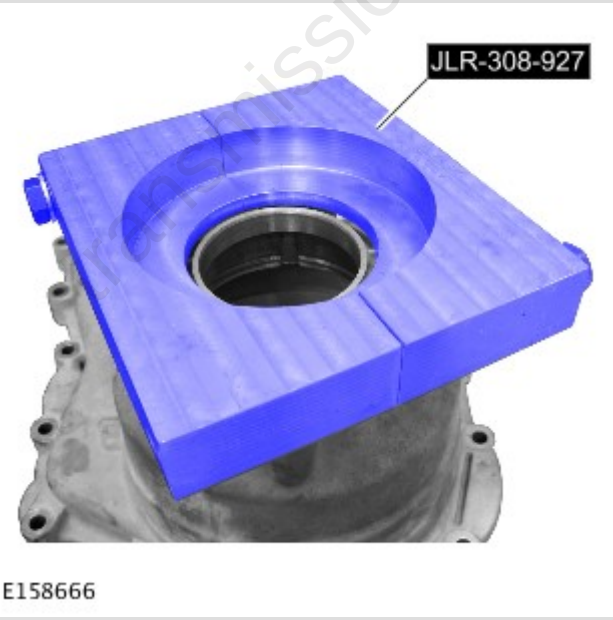

Position the special tool as shown, to support the transfer case during the next step.
Special Tool(s): JLR-308-927

transmissionmanuals.com

2.

CAUTION:

The chamfer on the bearing inner track must face the seal.



- Install the bearing.
  Special Tool(s): 205-726
- *Renew Part:* *Transfer case rear output seal and bearing kit* *Quantity:* *1* .

transmissionmanuals.com

3.



- Install the seal.
  Special Tool(s): 308-637

4.

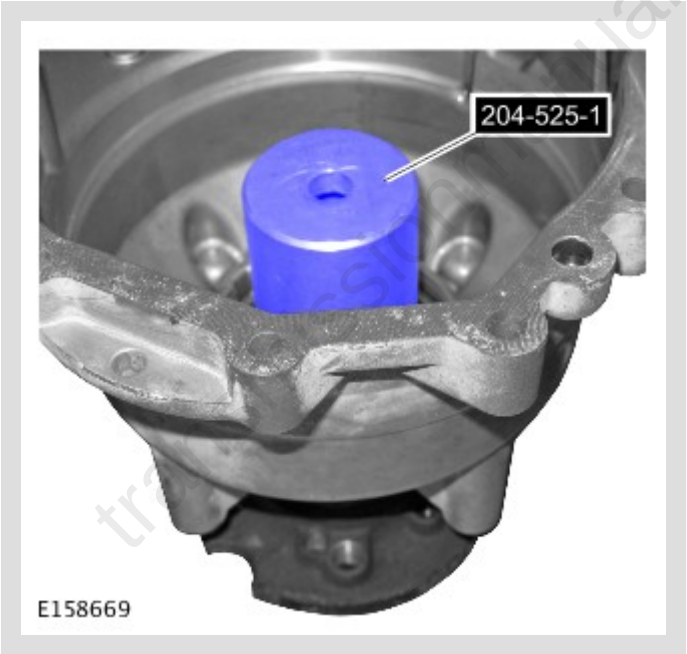

- Centralize the snap ring in the snap ring groove before installing the output flange.
- Extreme care is necessary to make sure the snap ring enters the bearing squarely.
- Install a new snap ring.
  Renew Part: *Transfer case rear output shaft snap ring* *Quantity:* *1* .
- Using the special tool and with assistance, install the drive flange.
  Special Tool(s): 204-525-1

5.

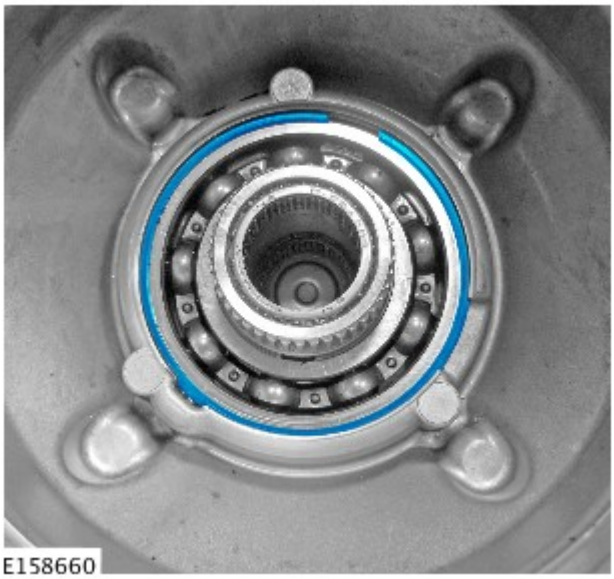

Install the circlip.

transmissionmanuals.com

6.

CAUTION:

Make sure that the component is clean and free of foreign material .

NOTE:

Make sure that the component is installed to the noted removal position.

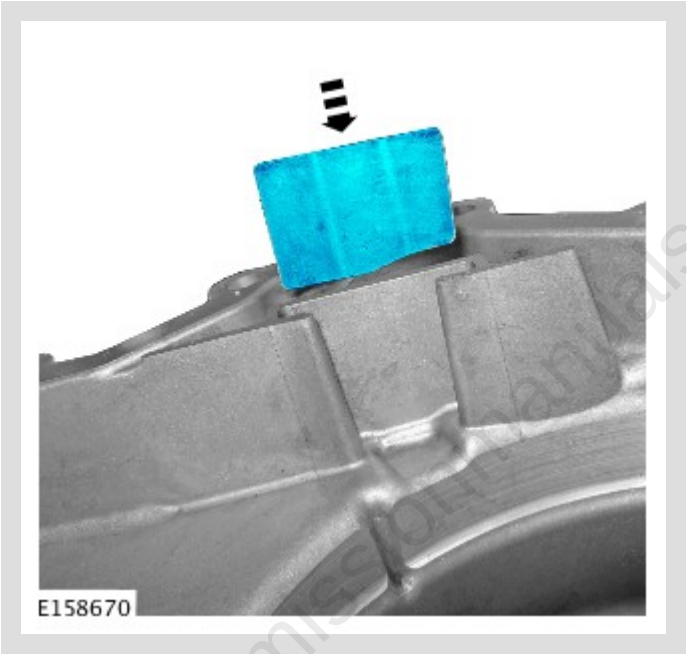

Install the magnet.

transmissionmanuals.com

7.

CAUTION:

Make sure that the retaining tangs are installed correctly.

NOTE:

Make sure that the component is correctly installed.

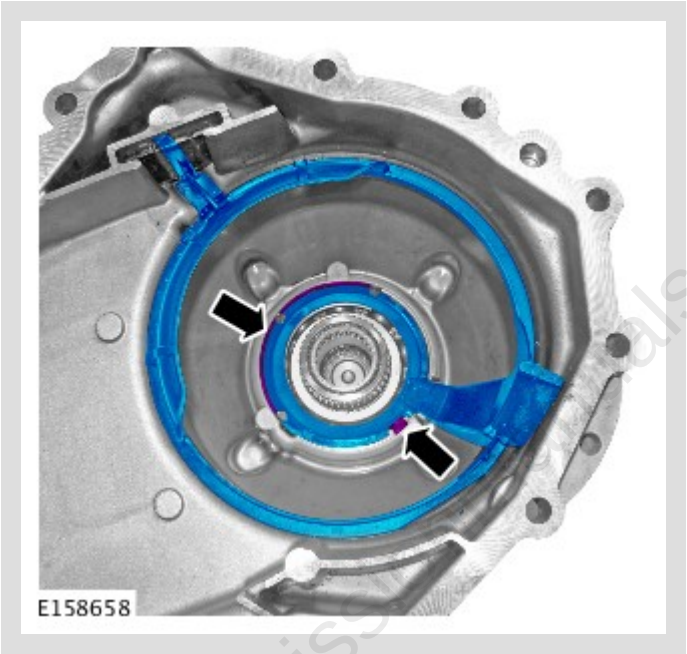

Install the oil guide assembly.

transmissionmanuals.com

8.

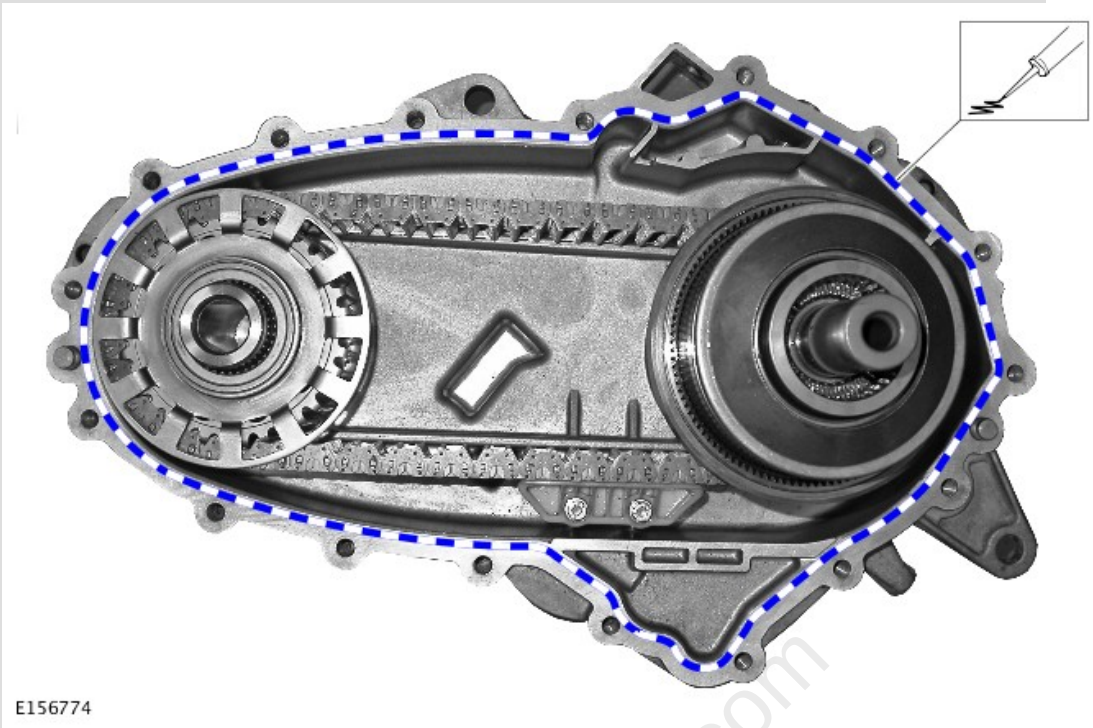

Apply a 2 mm bead of sealant to one surface of the transfer case mating face, as shown.
Refer to: Specifications (308-07 Four-Wheel Drive Systems, Specifications).

9.

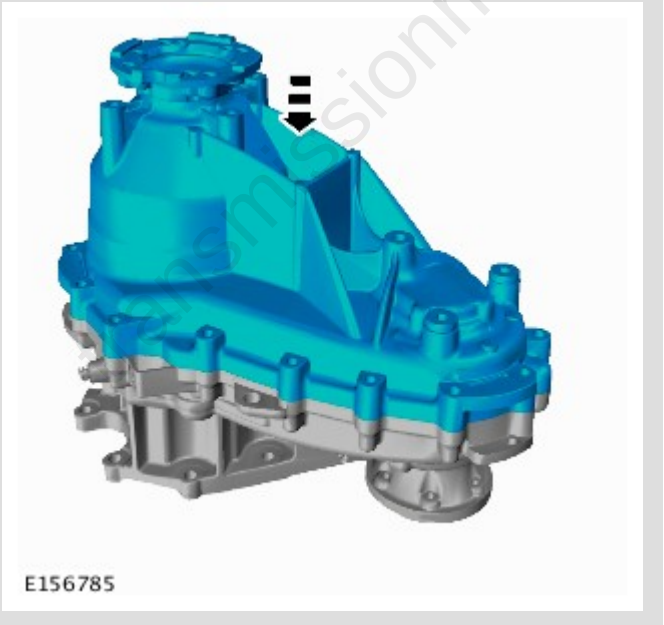

transmissionmanuals.com

10.

CAUTION:

Only tighten the bolts finger-tight at this stage.

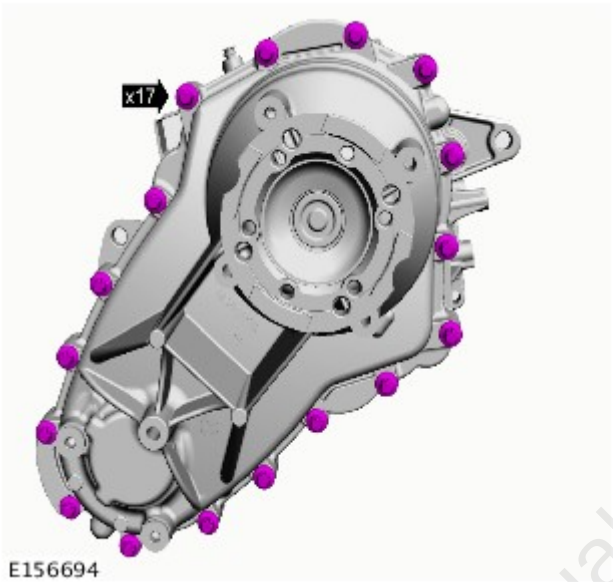

Install the 17 transfer box case bolts.

11.



Torque: **10 Nm**

transmissionmanuals.com

12.

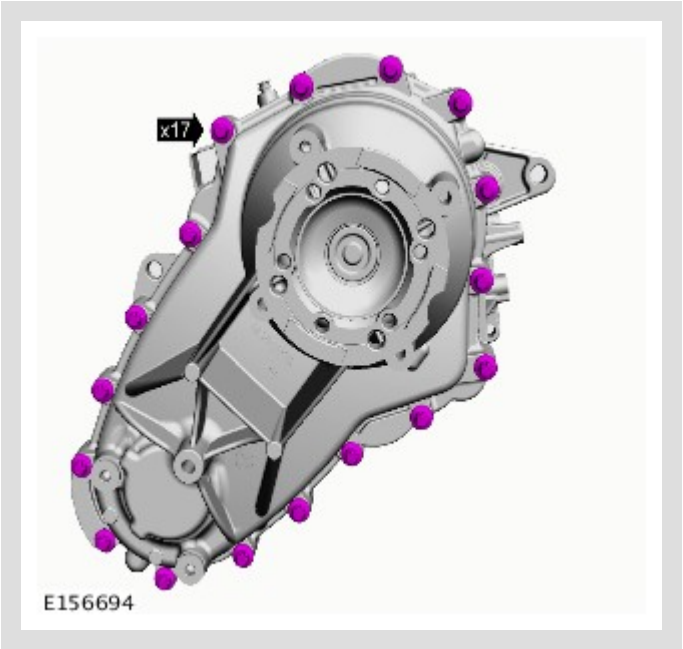

Torque: **35 Nm**

13. Install the transfer case.
Refer to: Transfer Case - TDV6 3.0L Diesel - Gen 2/TDV6 3.0L Diesel /TDV6 3.0L Diesel - Gen 1.5 (308-07 Transfer Case - [+] Single Speed Transfer Case, Installation).
Refer to: Transfer Case - V6 S/C 3.0L Petrol (308-07 Transfer Case - [+] Single Speed Transfer Case, Installation).
Refer to: Transfer Case - INGENIUM I4 2.0L Diesel (308-07 Transfer Case - [+] Single Speed Transfer Case, Installation).

14. Fill the transfer case with the recommended fluid.
Refer to: Transfer Case Draining and Filling (308-07 Transfer Case - [+] Twin Speed Transfer Case, General Procedures).

15. Connect the battery ground cable.
Refer to: Specifications (414-00 Battery and Charging System - General Information, Specifications).

transmissionmanuals.com